SERIES TL 9000 SWITCHES

TACT SWITCHES - SOFT TOUCH

SPECIFICATIONS

Contact Rating:	50 mA @ 12 VDC
Life Expectancy:	100,000 cycles minimum
Contact Resistance:	1000mΩ
Insulation Resistance:	100MΩ min.
Dielectric Strength:	250 VAC
Actuator Force:	120 ± 50 gf min.
Operating Temperature:	-20°C to +70°C
Travel:	1.0mm Typ

MATERIALS

Stationary Contact:	Silver over Nickel
Moving Contact:	Conductive Rubber
Terminals:	Brass

FEATURES & BENEFITS

- Long travel (1.5mm)
- Light force
- Carbon pill contact design

APPLICATIONS/MARKETS

- Telecommunications
- Consumer Electronics
- Audio/visual
- Medical
- Testing/instrumentation
- Computer/servers/peripherals

HOW TO ORDER

SERIES	MODEL NO.	OPERATING FORCE	CONTACT MATERIAL
TL	9000	F120	Q = Silver

Example Ordering Number

TL–9000–F120–Q

Specifications subject to change without notice.
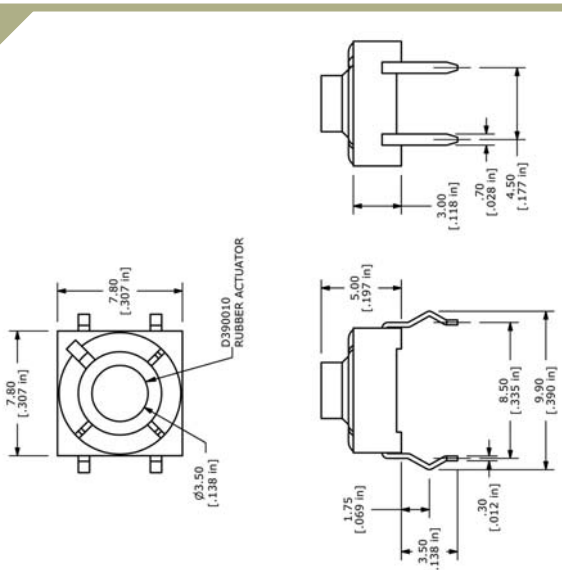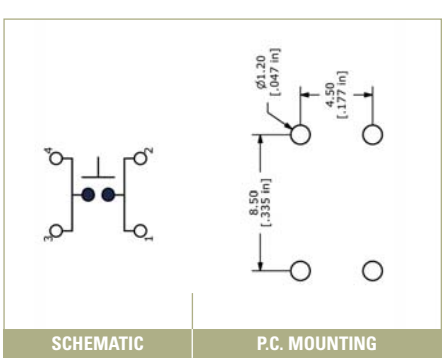
TL 9000